AGA TOTAL CONTROL
TC3

User Guide &
Installation Instructions

REMEMBER, when replacing a part on this appliance, use only spare parts that you can be assured conform to the safety and performance specification that we require.
DO NOT use reconditioned or copy parts that have not been clearly authorised by AGA.

PLEASE READ THESE INSTRUCTIONS BEFORE USING THIS APPLIANCE AND KEEP IN A SAFE PLACE FOR FUTURE REFERENCE.

For use in USA & CAN

07/17 EINS 516294

Make a note of your AGA Total Control Serial Number when it is being installed. The serial number can be found behind the magnetic plinth cover.

My AGA Details:

Serial No: _____

AGA Service No: _____

Date of Installation: _____

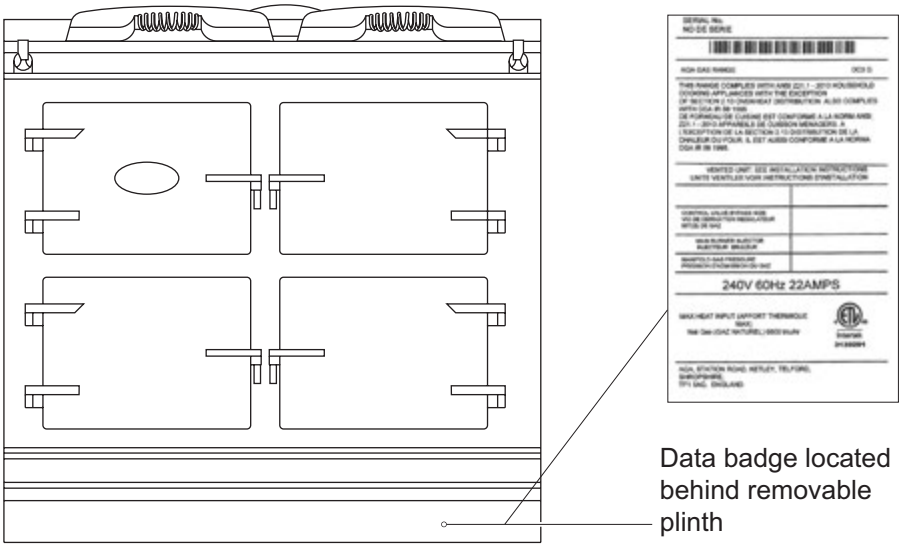

Contents

1. Product Safety 1

2. Health & Safety 3

3. Introduction 5

4. Overview 6

5. Operating the AGA Total Control 7

Getting started 8
General Advice 9
Handset **Fig. 5.2** 10
Handset Advice 10
Communication/Handshake 11
Date and Time Setting 12
Auto/Events program screen 12
Information (Home) Screen 13

6. AGA Accessories 15

Fitting the Oven Shelves 17
Removing the Oven Shelves 17

7. The Ovens 18

The Roasting Oven 19
The Baking Oven 20
Slow Cook Oven 21
Using the zones of the AGA Total Control 22
The Plates 22
Fitting the Doors 23
Removing the Doors 23

8. Cleaning & Caring for your Range 24

9. Troubleshooting 26

10. Installation Instructions 27

11. Installation Introduction 28

12. Location 29

13. Connection to the Power Supply 32

14. Circuit Diagram AGA TC3 34

15. Warranty 35

16. Service 37

1. Product Safety

Meaning / Description	Symbol	Signification / Description
WARNING / CAUTION An appropriate safety instruction should be followed or caution to a potential hazard exists.		**AVERTISSEMENT** Une consigne de sécurité appropriée doivent être suivies ou garde d'un danger potentiel exists.
DANGEROUS VOLTAGE To indicate hazards arising from dangerous voltages.		**TENSION DANGEREUSE** Pour indiquer les dangers résultant des tensions dangereuses.
PROTECTIVE EARTH (GROUND) To identify any terminal which is intended for connection to an external conductor for protection against electric shock in case of a fault, or the terminal of a protective earth (ground) electrode.		**TERRE DE PROTECTION** Pour marquer bornes destinées à être raccordées à un conducteur de protection extérieur contre les chocs éclectiques en cas de défaut d'isolement, ou pour marquer la borne de la terre de protection.
HEAVY This product is heavy and reference should be made to the safety instructions for provisions of lifting and moving.		**LOURD** Ce produit est lourd et doit être fait référence auc consignes de sécurité relatives aux dispositions de soulever et déplacer.
DISCONNECT MAINS SUPPLY Disconnect incoming supply before inspection or maintenance.		**APPAREIL À LASER DE CLASSE 2** Alimentation d'entrée Débrancher avant inspection ou d'entretien.
REFER TO MANUAL Refer to relevant instructions detailed within the product manual.		**ATTENTION, SURFACE TRÉS CHAUDE** Reportez-vous aux instructions applicables, indiquées dans le manuel du produit.

Important Safety Instructions

INCORRECT USE OF THIS RANGE CAN INCREASE THE RISK OF FIRE, ELECTRIC SHOCKS OR INJURY TO PERSONS.

PLEASE READ THE FOLLOWING PRECAUTIONS TO REDUCE THESE RISKS.

This appliance is not intended for use by persons (including children) with reduced physical, sensory or mental capabilities, or lack of experience and knowledge, unless they have been given supervision or instruction concerning use of the appliance by a person responsible for their safety.

ALWAYS

Always make sure children are never left alone or unsupervised when the range is on.

Always be aware that range surfaces will be hot during and after use and can cause burns.

Always teach children that the range and utensils can be hot.

Always allow heavy and hot utensils to cool in a safe place and out of reach of small children.

Always be aware hot grease is flammable. Wipe off any grease deposits on the range top and front.

In the event of a grease fire, do not remove the pan, cover the pan to extinguish the flame.

Always turn utensil handles inwards but not cover adjacent heated surfaces, to prevent accidental spillage and burns.

Always when opening an oven door, allow hot air and steam to escape.

Always use dry pot holders. Moist pot holder will cause steam burns. Do not use towels or other cloths near the heated plates.

Always clean ventilation hoods frequently. grease should not be allowed to accumulate in hood and filters.

Always make sure cabinet and work surface are capable of supporting heavy cooking utensils used on your range.

Always make sure cooking utensils are suitable for range top service. Only certain types of glass, glass ceramic earthenware/glazed utensils with stand sudden temperature changes without breaking.

Always make sure your appliance is properly installed and grounded by a qualified technician.

Always make sure your appliance is serviced by a qualified technician.

NEVER

Never store items of interest to children above the range.

Never allow children to climb on, sit or stand on any part of the range.

Never allow children to play with the controls or any part of the range.

Never wear loose fitting clothing or other flammable materials that could contact hot surfaces on the range.

Never leave boiling pans unattended, boil over causes smoking and greasy spillovers may ignite.

Never store gasoline or other volatile liquids in the range or in cabinets above or near the range, which can catch fire or explode.

Never use water on grease fires. Smother fire or flame or use a dry chemical or foam type extinguisher.

Never use your appliance for warming or heating the room.

Never repair or replace any part of the appliance unless recommended in this manual. All other servicing should be carried out by a qualified technician.

Never cover or restrict the air flow to the controls compartment.

Never install cabinets (shelves) or similar above the range with a depth greater than 13" (330mm).

Never heat unopened food containers. Pressure build-up may cause the container to burst and cause injury.

Never reach directly into a hot oven to add or remove cooking utensils. Instead pull the grid shelf out to its maximum projection.

Never use a steam cleaner to clean your range.

Never use a power spray or oven cleaners on the control panel.

Never use caustic cleaners, abrasive pads or metal scrapers to clean enamel surfaces.

2. Health & Safety

Consumer Protection

As a responsible manufacturer, we take care to make sure that our products are designed and constructed to meet the required safety standards when properly installed and used.

INCORRECT USE OF THIS RANGE CAN INCREASE THE RISK OF FIRE, ELECTRIC SHOCKS OR INJURY TO PERSONS.

PLEASE READ THE FOLLOWING PRECAUTIONS TO REDUCE THESE RISKS.

- This appliance is not intended for use by persons (including children) with reduced physical, sensory or mental capabilities, or lack of experience and knowledge, unless they have been given supervision or instruction concerning use of the appliance by a person responsible for their safety.
- Children should be supervised to ensure that they do not play with the appliance.
- **PLEASE READ THE ACCOMPANYING WARRANTY.** Any alteration that is not approved by AGA could invalidate the approval of the appliance, operation of the warranty and could also affect your statutory rights.
- **YOUNG CHILDREN SHOULD BE KEPT AWAY FROM THE APPLIANCE AS SURFACES CAN BECOME HOT TO TOUCH.**

ALWAYS

- Children are more sensitive to heat than adults.
- Always make sure children are never left alone or unsupervised when the range is on.
- Always be aware that range surfaces will be hot during and after use and can cause burns.
- Always teach children that the range and utensils can be hot.
- Always allow heavy and hot utensils to cool in a safe place and out of reach of small children.
- Always be aware hot grease is flammable. Wipe off any grease deposits on the range top and front.
- Do not leave containers of cooking fat around the range.
- In the event of a grease fire, do not remove the pan, cover the pan to extinguish the flame.
- Always turn utensil handles inwards but not cover adjacent heated surfaces, to prevent accidental spillage and burns.
- Always when opening an oven door, allow hot air and steam to escape.
- Always use dry pot holders. Moist pot holder will cause steam burns. Do not use towels or other cloths near the heated plates.
- Always clean ventilation hoods frequently. Grease should not be allowed to accumulate in hood and filters.
- Always make sure cabinet and work surface are capable of supporting heavy cooking utensils used on your range.
- Always make sure cooking utensils are suitable for range top service. Only certain types of glass, glass ceramic earthenware/glazed utensils with stand sudden temperature changes without breaking.
- Always make sure your appliance is properly installed and grounded by a qualified technician.
- Always make sure your appliance is serviced by a qualified technician.

NEVER

- Never store items of interest to children above the range.
- Never allow children to climb on, sit or stand on any part of the range.
- Never allow children to play with the controls or any part of the range.
- Never wear loose fitting clothing or other flammable materials that could contact hot surfaces on the range.
- Never leave boiling pans unattended, boil over causes smoking and greasy spillovers may ignite.
- Never store gasoline or other volatile liquids in the range or in cabinets above or near the range, which can catch fire or explode.
- Never use water on grease fires. Smother fire or flame or use a dry chemical or foam type extinguisher.
- Never repair or replace any part of the appliance unless recommended in this manual. All other servicing should be carried out by a qualified technician.
- Never cover or restrict the air flow to the controls compartment.

- Never install cabinets (shelves) or similar above the range with a depth greater than 13" (330mm).
- Never heat unopened food containers. Pressure build-up may cause the container to burst and cause injury.
- Never reach directly into a hot oven to add or remove cooking utensils. Instead pull the grid shelf out to its maximum projection.
- Never use a steam cleaner to clean your range.
- Never use a power spray or oven cleaners on the control panel.
- Never use caustic cleaners, abrasive pads or metal scrapers to clean enamel surfaces.
- Never use aluminium foil as a protective liner on the oven base, except as suggested in the manual. Improper use of this type of liner may create a risk of fire.

Deep Fat Frying

- Use a deep pan.
- Never fill the pan more than one-third full of fat or oil
- Never use a lid on the pan.
- **Important**: Oil is a fire risk, do not leave pans containing oil unattended.
- In the event of a fire, cover the pan with a lid and turn OFF the appliance.
- Do not try to fry too much food at a time, especially frozen food. This only lowers the oven temperature of the oil or fat too much, resulting in greasy food.
- Always dry food thoroughly before frying, and lower it slowly into the hot oil or fat. Frozen foods in particular, will cause frothing or spitting, if added too quickly.
- Never heat fat, or fry with a lid on the pan.
- Keep the outside of the pan, clean and free from streaks of oil or fat.

Smother the flames on the hob preferably with a fire blanket, rather than attempting to remove the pan to the outside.

Burns and injuries are caused almost invariably by picking up the burning pan to carry it outside.

Do not hang dish towels on the left hand side of the AGA handrail. Doing so will block the air vent. Blocking the air vent can cause excessive temperature increase to the control panel and prevents easy access to the controls.

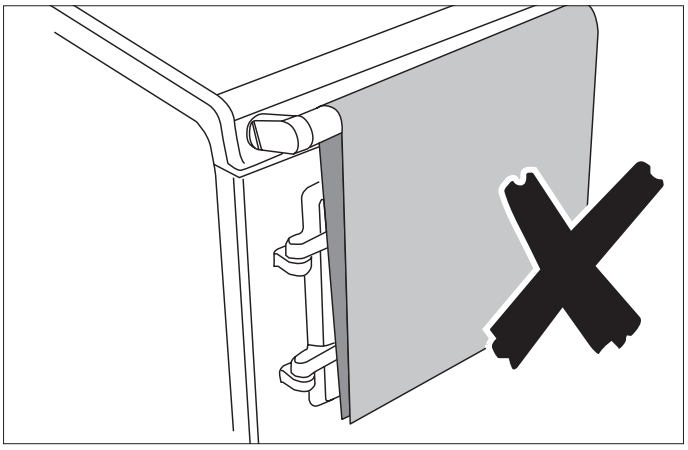

When the oven(s) are on **DO NOT** leave any oven door open for long periods, this will effect the temperature of the oven and may allow controls to become hot.

A little smoke and some odor may be emitted when the appliance is first switched on. This is normal and harmless (from oven lagging and starch binder on the element insulation) and will cease after a short period of use.

CAUTION: The Control System of your AGA will, because of regulatory compliance requirements, implement a software reset at 2.00 am local time. The reset process will turn off the external vent fan. If you have at any time manually set the vent fan to be ON, please check its operation before you commence cooking.

3. Introduction

As responsible manufacturers we take care to make sure that our products are designed and constructed to meet the required safety standards when properly installed and used.

Your new AGA Total Control gives you everything you love about the classic AGA heat storage cooker, but with the added convenience of touchscreen technology and the ability to turn each cooking area on and off, as and when you want it.

Refer to the diagram in the Overview chapter to familiarise yourself with the product and refer to the relevant sections for the ovens, plates, controls etc.

The cooking excellence of the AGA range has been famous since it's inception in the 1920's and is renowned due to the indirect radiant heat that its cast iron emits rather than just air temperature. And, if you haven't found out already, you'll soon discover that food that is cooked this way retains its natural flavour and succulence, and simply just tastes better.

IMPORTANT NOTICE: PLEASE READ THE ACCOMPANYING WARRANTY.

Any alteration that is not approved by AGA could invalidate the approval of the appliance, operation of the warranty and could affect your statutory rights.

In the interests of safety and effective use, please read the following before using your new AGA appliance.

The use of the cooking appliance results in the production of heat and moisture in the room in which it is installed. Ensure that the kitchen is well ventilated: keep natural ventilation holes open or install a mechanical ventilation device (mechanical extractor hood).

Prolonged intensive use of the appliance may call for additional ventilation, for example, opening of a window, or more effective ventilation, for example increasing the level of mechanical ventilation where present.

Installation must be to local and national wiring regulations and carried out by a qualified engineer.

A little smoke and some odour may be emitted when first switched on. This is normal and harmless (from oven lagging and starch binder on the element insulation) and will cease after a short period of use.

4. Overview

WARNING: ACCESSIBLE PARTS MAY BECOME HOT DURING USE. TO AVOID BURNS AND SCALDS CHILDREN SHOULD BE KEPT AWAY.

AGA TC3

Fig. 4.1

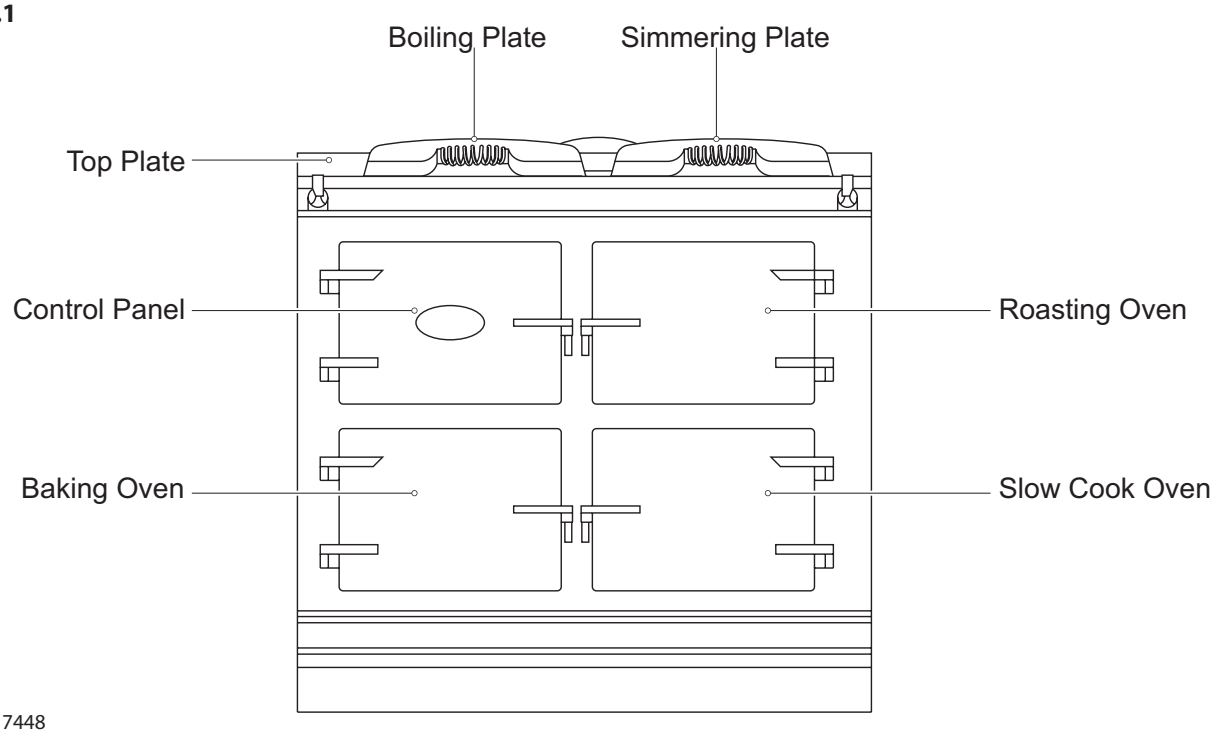

DESN 517448

The AGA TC3 has the traditional cast iron ovens with independently controlled hotplates.

Hotplates

The two hotplates are at different heats; the boiling plate being the hottest of the two and the simmering plate is a lower heat. Each plate is individually controlled.

Boiling Plate

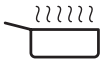

The boiling plate is used for making toast, boiling a kettle, stir-frying and cooking at a higher heat.

Simmering Plate

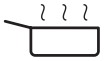

The simmering plate is for slower cooking, such as sauces, simmering pans and can also be used to cook on directly for toasted sandwiches, drop scones, no-fat fried eggs and quesadillas.

Roasting Oven

The hottest oven for high temperature cooking; pastries breads, roasting of meat, vegetables and poultry, grilling at the top of the oven and frying on the floor.

Baking Oven

A moderate oven for cooking cakes and biscuits, baking fish, lasagne or shepherds pie, plus roasting meat and poultry at a medium heat. Cooking sweet and savoury together is no problem as the flavours do not mix.

Slow Cook Oven

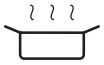

Long, slow cooking in the Slow Cook Oven develops flavours and makes the toughest meat tender. It's large capacity means several pans can be stacked here; soup, casserole, steamed rice, steamed carrots and poached pears all cooking simultaneously, without any danger of burning.

5. Operating the AGA Total Control

Fig. 5.1

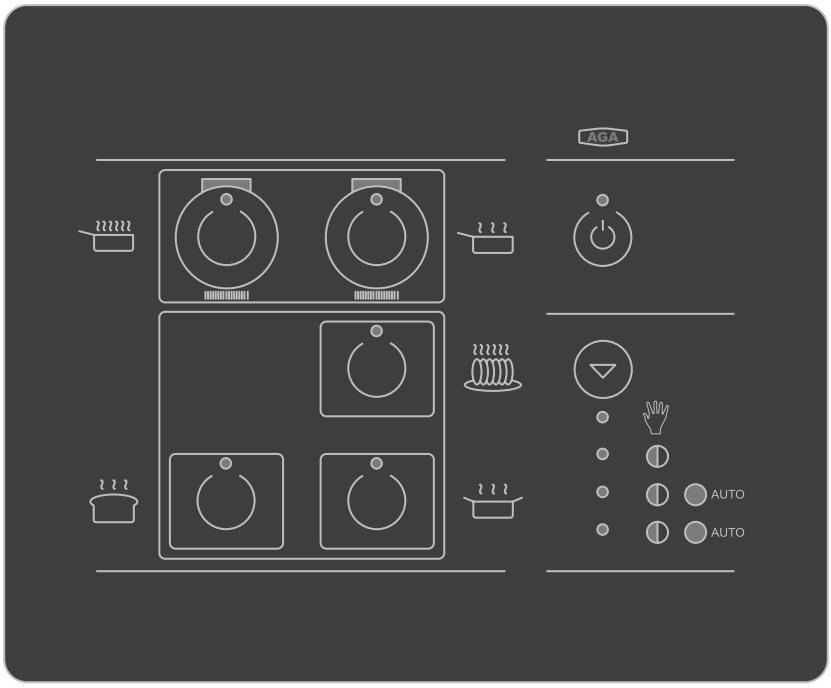

DESN 517464

Control Panel Fig. 5.1

This is situated behind the top left hand door. The control panel contains touch sensitive buttons with a green or orange light (LED indicator) to indicate which zone is activated. An audible beep will confirm selection.

Handset Fig. 5.2

Your AGA Total Control cooker also comes with a Handset which can be used to program the ovens. It displays the time, date and program events. The hotplates work on Manual only.

Fig. 5.2

DESN 517465

Getting started

When switching on the AGA cooker for the first few times, there are two things you may notice, neither of which should cause concern.

1. A little smoke and some odour may be emitted when first switched on. This is normal and harmless (from oven lagging and starch binder on the element insulation) and will cease after a short period of use.
2. Condensation may occur on the top and front plate whilst the AGA cooker is heating up, caused by the internal insulation drying out. The condensation should be wiped away as soon as possible to prevent staining the enamel.

Your AGA Total Control has the external appearance of a classic AGA heat storage enamelled cast iron cooker. However its flexibility is almost unbounded because in place of a single heat source each cooking zone has its own electrically heated cast iron element(s). The separation of cooking zones, allows a choice of control. You are able to select only those zones that you want, or need, to use.

The control panel is situated behind the top left hand door. It contains touch sensitive buttons with a green or orange light (LED indicator) to indicate which zone is activated. An audible beep will confirm selection. There are eight buttons:

	Standby/ON
	Mode Manual > Slumber > AUTO > AUTO/Slumber selection
	Boil (Boiling plate) ON/OFF
	Simmer (Simmering plate) ON/OFF
	Roast (Roasting oven) ON/OFF or selected for AUTO or AUTO/Slumber
	Bake (Baking oven) ON/OFF or selected for AUTO or AUTO/Slumber
	Simmer (Slow cook oven) ON/OFF or selected for AUTO or AUTO/Slumber

The appliance has 4 operating modes:

Mode Selection Button

Manual > Slumber > AUTO > AUTO/Slumber selection can only be made when standby button is on.

Standby Button

This button must be on i.e. green to operate any part of your AGA Total Control, or for any Timed events.

Manual *simply select what you require*

Each heat zone (an oven or a hotplate) can be turned on or off as required, just press the appropriate button, a green light will show when a specific zone is in operation.

The green indicator light of the selected zone (s) will flash slowly indicating that the zone (s) is warming up. Once the selected zone (s) is at temperature and ready to use the green light will stop flashing. It is normal for the green light to flash slowly during cooking, this indicates that the heat zone is requesting power. While in Manual mode any zone selected will remain on indefinitely until switched off.

Slumber *(ovens only)*

In this mode, all three ovens are active, (the roasting and baking oven are pre-set to approximately 248°F, the slow cook oven is pre-set to approximately 212°F).

When selected, the orange indicator light of the ovens will flash slowly, indicating that the ovens are warming up, when 'Slumber' temperature is reached the orange light will stop flashing.

No individual oven can be 'OFF'. However any oven can be switched from 'Slumber' to full heat by one press of its button. When pressed once, the selected oven goes to 'full heat', there will be a flashing green light, when at temperature the light will stop flashing.

Pressing an individual oven button once more returns that oven back to 'Slumber'.

AUTO *(ovens only) - brings selected ovens up to full heat from OFF*

The ovens can be selected to operate once or twice each day.

Each operation is termed an 'event', the start and finish time is chosen by you unless you use the pre-set time.

The handset will have been set up by the installer. It should have the correct time of day set. Unless you have set your own Auto program, it will include the pre-set time (1 Event 7am - 7pm).

See **page 12** to set your own Auto program preferences.

1. Select 'AUTO' mode.
2. Select oven (s) for automatic operation, by pressing the appropriate button (s).
3. The oven (s) selected is indicated by an orange light (unless you have selected 'AUTO' during an 'event' period). During an 'event'period the light will be green.
4. The oven light will flash green while the oven is heating. When at temperature the green light will stop flashing.

PLEASE NOTE:

- Don't forget to include time for warm-up.
- Don't forget if you have set the AUTO program and have selected the AUTO mode, an oven or ovens must be selected.
- The hotplates can only be operated manually.
- The last 'AUTO' oven selection is remembered and re-called when 'AUTO' is next selected.

DO NOT OPERATE WITH THE APPLIANCE DOORS OPEN

AUTO/Slumber *(ovens only) - brings selected ovens up to full heat from Slumber.*

The ovens can be selected to operate once or twice each day.

Each operation is termed an 'event', the start and finish time is chosen by you unless you use the pre-set time.

See **page 12** to set your own Auto program preferences.

1. Select 'AUTO/Slumber'.
2. Select oven (s) for automatic operation, by pressing the appropriate buttons.
3. The oven (s) selected is indicated by an orange light (unless you have selected 'AUTO/Slumber' during an 'event' period). During an 'event' period the light will be green.
4. The oven (s) selected is indicated by an orange light, the oven light will flash orange until 'Slumber' temperature has been reached.
5. The oven light will flash green while the oven is heating from 'Slumber' to full temperature during its Auto/Slumber event period. When at full temperature the green light will stop flashing.

PLEASE NOTE:-

- Don't forget to include time for warm-up.
- Don't forget if you have set the AUTO/Slumber program and have selected the AUTO/Slumber mode, an oven or ovens must be selected.
- The hotplates can only be operated manually.
- All the selected ovens will remain at 'Slumber' between 'events'.
- The last 'AUTO/Slumber' oven selection is remembered and re-called when 'AUTO' is next selected.

DO NOT OPERATE WITH THE APPLIANCE DOORS OPEN

AUTO and AUTO/Slumber

Changing between any of the four operating modes, will cause the hotplates to switch OFF if in use - this is a built-in safety factor. They can be switched back on after the mode change if required.

General Advice

Food **SHOULD NOT** be placed into any oven until it is up to normal operating heat i.e. the green light of the selected oven is solid and not flashing.

The oven doors should not be left open for long periods of time during cooking and heating up.

Store the cold plain shelf outside the cooker. Use it cold in the roasting oven to deflect heat from the top of the oven, creating a more moderate oven temperature underneath. It can also be used as a baking sheet.

When an oven or hotplate is at temperature, and is then loaded with food or cold pans/trays, the zone light may flash as the oven and/or hotplate calls for extra heat.

Warm up times

When a zone is heating up it will be indicated by a flashing green or orange light on the control panel. When a zone has reached temperature a solid green or orange light will indicate it has warmed up, AGA recommends that for full heat to saturate the castings it is best to leave them for one hour for the optimum cooking results.

Boiling Plate

The boiling plate takes approximately 11 minutes to reach temperature from cold.

Simmering Plate

The simmering plate takes approximately 8 minutes to reach temperature from cold.

Roasting Oven

The roasting oven takes approximately 35 minutes to reach temperature from cold, and approximately 15 minutes to reach temperature from 'Slumber'.

Baking Oven

The baking oven takes approximately 22 minutes to reach temperature from cold, and approximately 15 minutes to reach temperature from 'Slumber'.

Slow Cook Oven

The slow cook oven takes approximately 45 minutes to reach temperature from cold.

PLEASE NOTE: For optimum cooking performance, after the temperature has been reached, we recommend leaving for another 30 minutes for the castings to become heat saturated, particularly relevant if you are cooking a large meal or baking.

PLEASE NOTE: The times are based on each zone being operated individually. If a large combination of zones are turned on simultaneously, it may slow down the individual warm up times. If all zones are turned on at the same time it will take approximately one hour for the whole appliance to reach operating temperature.

These times are based on the cooker having a single phase supply of 36 amps @ 240 V. For other power supply configurations, these times may change.

	Communication or 'Handshake' button Used initially to synchronise the handset to the AGA Total Control. (On day of installation or in case of replacement handset.)
	Clock button Opens and closes the date and time settings screen.
	Left/Back button Moves back and highlights the previous setting.
	Plus button Increases the highlighted setting.
	Minus button Decreases the highlighted setting.
	Right/Forward button Moves forward and highlights the next setting.
	Copy button Copies the time program from the current day to the following day in the 7-day event calendar screen.
	7-day event button Opens and closes the 7-day event calendar screen.

Table 5.1 Button Operations

USA

Model Number AGA TC3

FCC ID: A2M-AGA-TC3

FCC ID: A2M-AGA-TC3TEK

This device complies with part 15 of the FCC Rules. Operation is subject to the following two conditions: (1) This device may not cause harmful interference, and (2) this device must accept any interference received, including interference that may cause undesired operation.

CANADA

Model Number AGA TC3

IC: 10181A-AGATC3TEK

Model Number AE4M280526

IC: 10181A-AGATC3

This device complies with Industry Canada licence-exempt RSS standard(s). Operation is subject to the following two conditions: (1) this device may not cause interference, and (2) this device must accept any interference, including interference that may cause undesired operation of the device.

Handset Fig. 5.2

The handset displays the time, date and events. Programming is via eight push buttons. The information is displayed via a back-lit LCD screen.

Screens

The handset has 3 main screens.

1. The Information Home screen (main menu)
2. The Date/Time screen
3. The Events Programming screen

The display will revert to 'sleep' mode after approximately 3 minutes. Simply press the required button to open up any screen.

Handset Advice

Operating Distance

The handset will only operate in the same room as the cooker and up to a maximum distance of 13 feet (4 metres) from the appliance. If out of recommended operating range, the handset may show 'Standby'. If this happens move the handset back to within the recommended distance and it should correct itself, see below.

Handset to AGA Total Control Signal Check

The ⏻ symbol is shown when in the following situations:-

1. In Standby mode
2. If communications fail
3. There is a power cut
4. If the handset is out of range of the AGA Total Control cooker

When transferring information from or to the controller always operate the handset in front of the cooker, this gives the strongest signal.

If the handset shows ⏻ , when the cooker is on, press the button firmly for 1 second, this will activate the communication link between the cooker and handset.

Communication/Handshake

For details on initial Communication/Handshake, see **page 11**.

Preview Mode

If the handset is out of range of the cooker or if the appliance is switched off, Preview only mode is available. Changes cannot be made to the programmed events. The ⏻ symbol is displayed in the screen and the message 'Preview only' is displayed briefly when the events program screen is first entered.

When in Preview Mode you can review the days by using the ⊕ and ⊖ buttons. The ❮ and ❯ buttons become inactive and you cannot make any changes.

Handset Failure

In the unlikely event of handset failure, the appliance would still be operational with the last selected program. The cooker can also be changed to Manual mode from one of the auto modes using the mode button on the control panel. If the handset is damaged or lost, a replacement can be obtained from AGA and re-programmed to suit your appliance.

DO NOT PLACE THE HANDSET ON ANY HOT SURFACES.

Communication/Handshake

This process will be required on the original installation of the AGA Total Control. If the handset is replaced for any reason the new handset will need to be synchronised.

- You will also need to set the time and date.
- You will also be given the option to set your own Auto program preferences.

1. Handshake can be activated 30 seconds after main power has been applied to the cooker. The Standby button on the touch panel must be 'ON'. It must then be completed within 2 minutes, otherwise you will need to repeat the process **Fig. 5.3**.
2. Press and hold button on the handset for 10 seconds to open the communicate/synchronise screen. The following screen message then appears **Fig. 5.4**.
3. Simultaneously press the and buttons, the serial number will be 'found' by the handset. The following screen message then appears briefly **Fig. 5.5**.
4. Use the and buttons to choose the language you want the handset text to be in, then press to confirm the language choice required. Once time and date has been set the Auto/Event program screen will appear.
5. Set the correct time and date **page 12**
6. You have the option to set your own Auto program, refer to **page 12**. If you wish to leave until later, then press it will remain at the pre-set times: 1 Event 7am - 7pm (7 days).

Notes

- symbol appears in the top right hand corner of the screen, if the handset is out of range with the cooker or the communication/handshake process has not been completed. When communication is OK then symbol is displayed.
- The button can be used to force communication between the cooker and the handset. This function is active once successful initial communication has been made, and the handset is in range.

Fig. 5.3

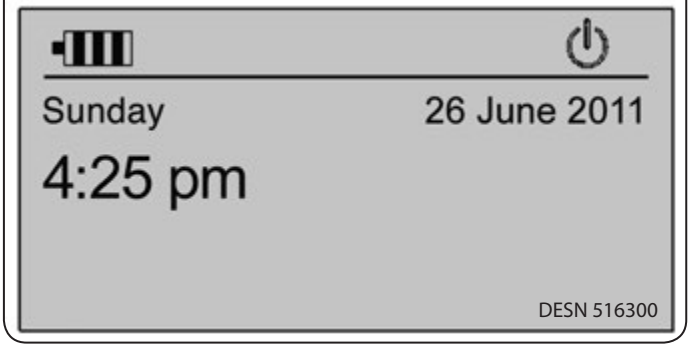

Fig. 5.4

Press and
to synchronise

Fig. 5.5

Serial Number
found

Fig. 5.6

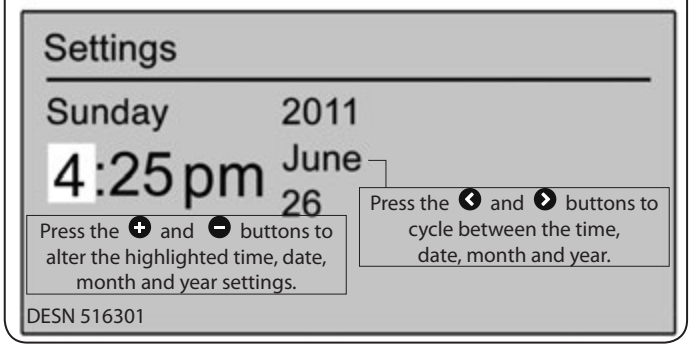

Fig. 5.7

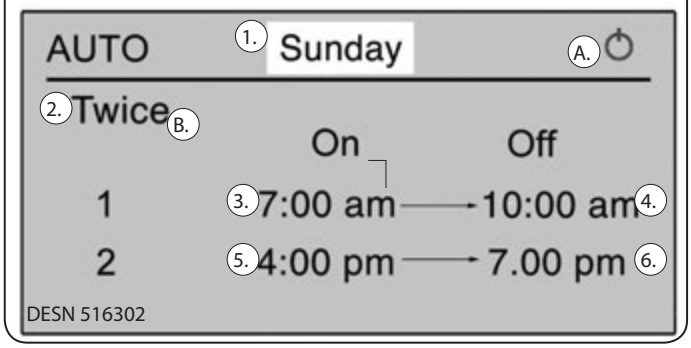

A. Stand-by icon will appear if in Preview Mode.

B. Setting:

- 'Twice' will be shown if two events are set.
- 'Once' will be shown if one event is set.
- 'No' will be shown if no events are set.

Date and Time Setting

Press and hold Clock button until the screen is displayed **Fig. 5.6**. In this screen the time, date, month and year can be altered/set.

Press button at any stage to save the settings and exit the DATE/TIME screen.

'Message sent OK' will appear on the screen when the handset is in range of the cooker.

'Changes stored on handset only' will appear on the screen, when the controller handset is out of range of the cooker.

Notes

- Even if no changes are made to the time, date, month and year settings, a press of the clock button is still required, to return to the Home screen.
- The day cannot be changed as the handset automatically knows this information, when the date and year is set.
- The Home screen will automatically appear after the replacement of new batteries.

Auto/Events program screen

This screen **Fig. 5.7** is opened by pressing the 7-day event button .

In this screen, the number of events and the start and end time of events can be set. Each day can have a different number of events, and start and end times, or all seven days can be the same.

There are pre-set times already programmed, to change to your desired settings follow these instructions. Pre-set times are 1 event 7am - 7pm (7 days).

What you can do

1. The current day is shown on the display, this can be changed to the day that you wish to edit by pressing the and buttons.
2. This shows the number of events in that day. This can be changed from no, once or twice by pressing the and buttons.
3. This shows the start time of the first event. This can be changed by pressing the and buttons.
4. This shows the end time of the first event. This can be changed by pressing the and buttons.
5. This shows the start time of the second event. This can be changed by pressing the and buttons.
6. This shows the end time of the second event. This can be changed by pressing the and buttons.

How you do it

1. Press the ❮ or ❯ buttons to navigate through the settings on the screen. When a setting is selected it will be highlighted by a dark box. Pressing the ⊕ and ⊖ buttons. will change the information in this highlighted box.
2. Press ⧉ to copy program settings to next day.
3. If you have made changes and wish to exit this screen, press the ⏏ button. A 'Save Changes' - Yes or No? message will appear on the screen.
4. Pressing the ❮ and ❯ buttons will highlight Yes or No. Press the ⏏ button again to confirm your choice.

REMEMBER: After setting the Auto event that an oven selection must be chosen on the touch panel ⏲ if you wish to activate the program you have just entered.

Notes

Even if no changes are made a press of the ⏏ button is still required, to return to the Home screen.

Information (Home) Screen

This is the main screen **Fig. 5.8**, where information such as time, date, battery life and connectivity is displayed. If you have programmed either of the 'AUTO' modes and they are currently in progress, the next change of event will also be displayed. The information below explains this in more detail.

Press any button on the handset to open this screen, from 'Sleep' mode.

A. Symbol indicating the battery life.

B. If there is no communication between the AGA Total Control and the handset because: the cooker is not powered, in standby or the handset is out of range from the cooker. The symbol is displayed.

C. Communication/Handshake symbol indicates communication between the cooker and handset is OK.

D. Symbols indicating the current time and day.

E. Warning triangle and error code is displayed if an error occurs.

F. If either AUTO or AUTO/Slumber mode is active the next event change will be displayed for that day with the relevant symbols to show start and end times.

NOTE: If standby icon is shown then event indicator will not be displayed.

Change of Event Symbols

- ○ > ● **AUTO event ON** *(before AUTO event)*
- ● > ○ **AUTO event OFF** *(during AUTO event)*
- ◐ > ● **AUTO/Slumber event ON** *(before AUTO/ Slumber event)*
- ● > ◐ **AUTO/Slumber event OFF** *(during AUTO/ Slumber event)*

Fig. 5.8

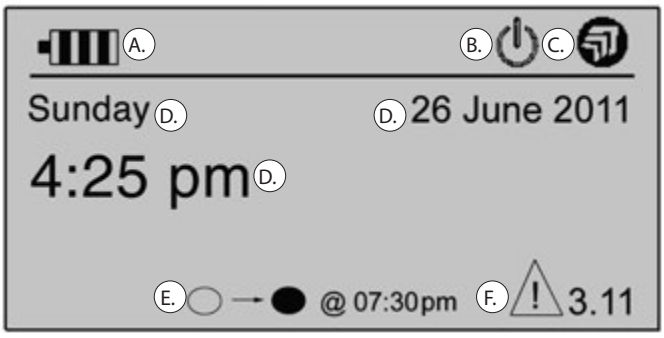

DESN 516303

Fig. 5.9

DESN 517480

Fig. 5.10

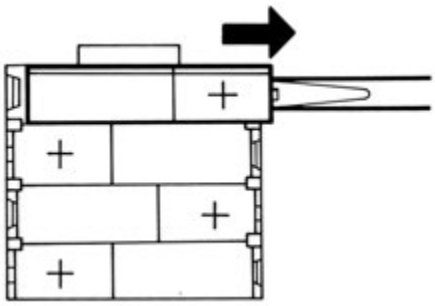

DESN 517481

Fig. 5.11

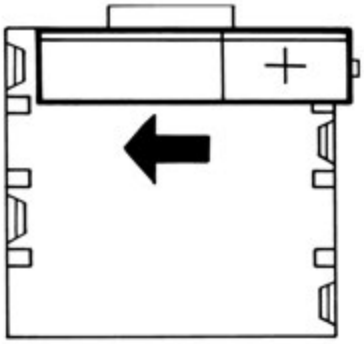

DESN 517482

Power Outages under 10 minutes

When the power is restored, the AGA Total Control will resume normal operation as was set prior to the power interruption.

Power Outages over 10 minutes

Most functions will have turned OFF.

- 'Manual' mode - all zones OFF.
- 'Slumber' mode - hotplates OFF, Slumber ON
- 'AUTO' mode - hotplates OFF, ovens continue with the set programme.
- 'AUTO/Slumber' - hotplates OFF, ovens continue with the set programme.

A 'Power Outage' message may appear on the handset screen, confirm by pressing any button on the handset. Therefore the cooker may not be at temperature when expected.

Automatic Update of Time

In the event of power cuts the handset will automatically update the controls within the cooker to the correct time on restoration of power. This is provided that the following criteria are met:

1. The handset is sited within range of the cooker
2. The handset has good batteries
3. The handset contains the correct time itself

Batteries

The handset is fitted with four 'AAA' batteries, which are packed separately. Your installer will insert them when your AGA Total Control cooker is installed. When replacing the batteries, follow these instructions inconjunction with the diagrams.

Remove the handset from its backplate, then remove the battery cover plate from the rear of the handset (**Fig. 5.9**). Carefully lever out the batteries commencing with the bottom one first pushing and pulling out on the positive (+) end only (**Fig. 5.10**). Repeat this procedure to remove the other batteries.

Always use long life batteries for replacements - rechargeable batteries are not recommended.

Replace the batteries commencing with the bottom one working to the top (**Fig. 5.11**).

Battery life will depend on usage. Replace the batteries when the battery symbol on the handset is down to one bar.

Care and Cleaning

The handset should be wiped clean using a soft clean cloth. Do not use abrasive cleaning products or submerge the handset in water.

⚠ **No changes or modifications should be made to the handset. Changes or modifications not approved by AGA could void the users authority to operate the handset.**

6. AGA Accessories

To get the very best performance from your range we recommend AGA saucepans with the thick tri-core bases and stacking lids so that the maximum use of oven space is made and an AGA kettle for boiling water. AGA Accessories can be viewed at your AGA Specialist or online at www.agacookshop.co.uk

Getting to know your AGA

If you have not already seen a demonstration, ask your AGA Specialist for details. A demonstration will show you how to get the best from your new AGA and will give you hints and tips. You will also see a selection of AGA utensils and accessories being used.

Large Size Roasting Tin with Grill Rack (Fig. 6.1)

This is designed to slide onto the oven runners without the need for it to sit on an oven grid shelf. The roasting tin can be used with the grill rack, in its high position, for grilling at the top of the roasting oven. It can be used for roasting meat, or poultry with or without the grill rack. Large quantities of roast potatoes can be cooked in this tin. The roasting tin can also be employed for making large traybakes or cakes. The grill rack is useful on its own as a cake cooling rack. Can be used in any oven but not recommended for hotplate use.

Half Size Roasting Tin and Grill Rack (Fig. 6.2)

This tin can be slid onto the oven runners width-ways or can sit on an oven grid shelf. The half size roasting tin can be used with the grill rack, in its high position, for grilling at the top of the roasting oven. It can be used for roasting smaller joints of meat, or poultry with or without the grill rack. Roast potatoes can be cooked in this tin. The roasting tin can also be employed for making traybakes or cakes. The grill rack is useful on its own as a cake cooling rack. Can be used in any oven but not recommended for hotplate use.

1 Floor Grid (Fig. 6.3)

This grid is used on the floor of the ovens, in particular the roasting and simmering ovens to protect food needing over 30 minutes cooking from the intensity of the heat from the base element.

3 Oven Grid Shelves (Fig. 6.4)

These are for inserting in each oven to provide a surface for dishes and tins which do not fit direct onto the oven runners. They can be used in any oven, as required. See page 20 on how to locate the oven shelves correctly.

Fig. 6.1

Fig. 6.2

Fig. 6.3

Fig. 6.4

Fig. 6.5

Fig. 6.6

Fig. 6.7

Fig. 6.8

1 Cold Plain Shelf (Fig. 6.5)

This has two uses one as large baking sheet for scones, biscuits, pastry items and meringues and the other use as a heat deflector to cut off the top heat if food is overbrowning before it is cooked through.

⚠ DO NOT STORE IN THE OVENS WHEN NOT IN USE.

Roasting Oven Perforated Baffle (Fig. 6.6)

A roasting oven perforated baffle is positioned in the top of the roasting oven, in order to optimise cooking performance. For best results, please ensure it is in place at all times, while the oven is in operation, including when grilling. The Installation Engineer will fit this in place. This can also be removed for cleaning.

Toaster (Fig. 6.7)

This is for toasting bread on the boiling plate. AGA toast is renowned for its excellence, crisp on the outside and soft in the centre. Take thick slices of bread and place in the AGA toaster - if the bread is very moist or very fresh, heat the toaster beforehand to prevent sticking - lift the boiling plate insulated cover and place the toaster direct onto the plate with the handle at an angle from the handle of the cover.

Close the cover and wait for the bread to toast one side - this will take 1-2 minutes dependent upon the variety of bread - open the cover and turn the toaster over and repeat the process to toast the other side. The toaster can also be used for heating pitta bread, toasting teacakes and as a cake cooling rack.

Wire Brush (Fig. 6.8)

This is for cleaning the raw cast iron surfaces, keeping them clear of crumbs and burnt on debris – which would otherwise affect the boiling performance of pans and the kettle. Use on the hotplates and the ovens. Take care not to touch the enamel surfaces as the wire brush will scratch the finish.

Getting to know your AGA

If you have not already seen a demonstration, ask your AGA Specialist for details. A demonstration will show you how to get the best from your new AGA and will give you hints and tips. You will also see a selection of AGA utensils and accessories being used.

Fitting the Oven Shelves

Fig. 6.1

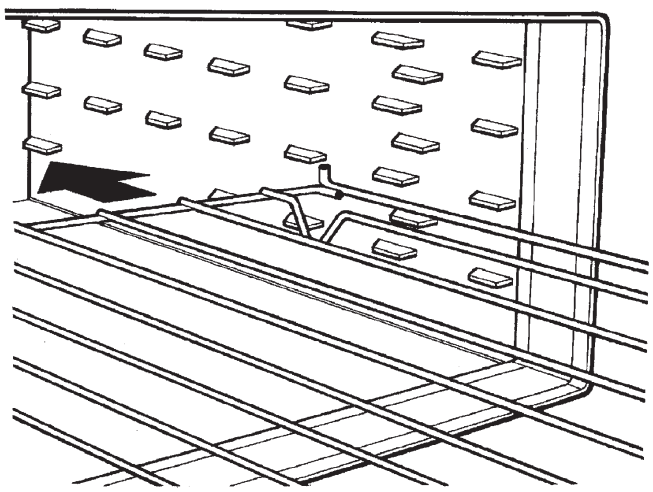

DESN 512403

Fig. 6.2

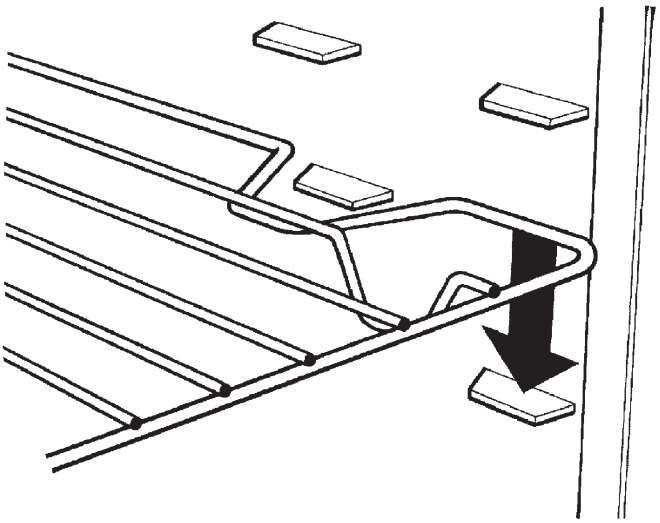

DESN 512404

Removing the Oven Shelves

Fig. 6.3

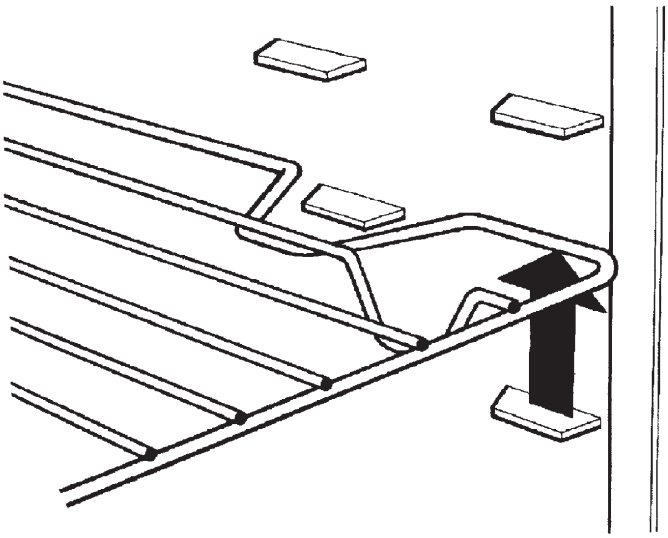

DESN 512405

Fig. 6.4

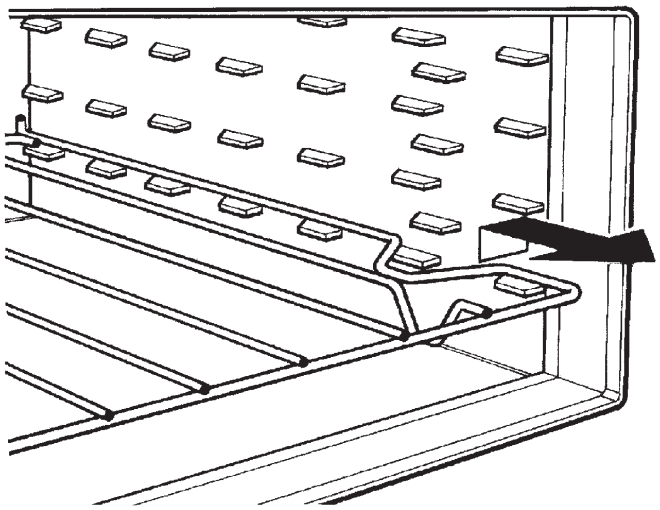

DESN 512406

7. The Ovens

Your AGA Total Control has three ovens, each of which is pre-set at a different heat, just like the classic AGA heat storage cooker. They are named as:

- The Roasting Oven for high temperature cooking
- The Baking Oven for moderate temperature cooking
- The Slow Cook Oven for long slow low temperature cooking

DO NOT OPERATE THIS APPLIANCE WITH THE DOORS OPEN, SINCE THIS CAN CAUSE A LOCK-OUT.

Each oven has the same capacity, (able to fit a 28lb (13kg) turkey) and the classic AGA heat-storage cooker techniques can be used such as stacking of saucepans in the slow cook oven. This enables the steaming of root vegetables, rice, steamed pudding, casserole, poaching fruit all in the one oven leaving the hotplates free and reducing steam and cooking smells in the kitchen.

You can have one, two or all three ovens on at their pre-set heat or the roasting and baking ovens can also be at 'Slumber' mode, (the slow cook oven is always at the same heat).

The ovens are made from cast iron, which cooks by a radiant heat and this is the secret of the cooking excellence for which the AGA cooker is renowned. An indirect radiant heat does not dry food out, so it retains its natural moisture and flavor.

Slumber Mode

In Slumber mode, all three ovens operate like a slow cook oven.

The slow cook oven is always in Slumber, whereas the roasting and baking oven can be set on Slumber mode for either cooking at a low heat, or to generate gentle warmth into the kitchen, or in readiness for turning up to their normal pre-set heat.

Cooking at Slumber in the roasting oven or baking ovens gives the best results for making large rich fruit cakes and meringues as they benefit from the gentle heat of top and base elements to ensure thorough cooking. Other foods which benefit from cooking at Slumber in these are ovens are steamed and Christmas Puddings and slow cooking large pieces/cuts of meat - start the cooking process before placing the oven on Slumber.

Recipes in the separate recipe book cooked on slumber are:

62 | Pears with Cardamom

68 | Steamed Banana pudding drizzled in Butterscotch Sauce

88 | Fruity Celebration Cake

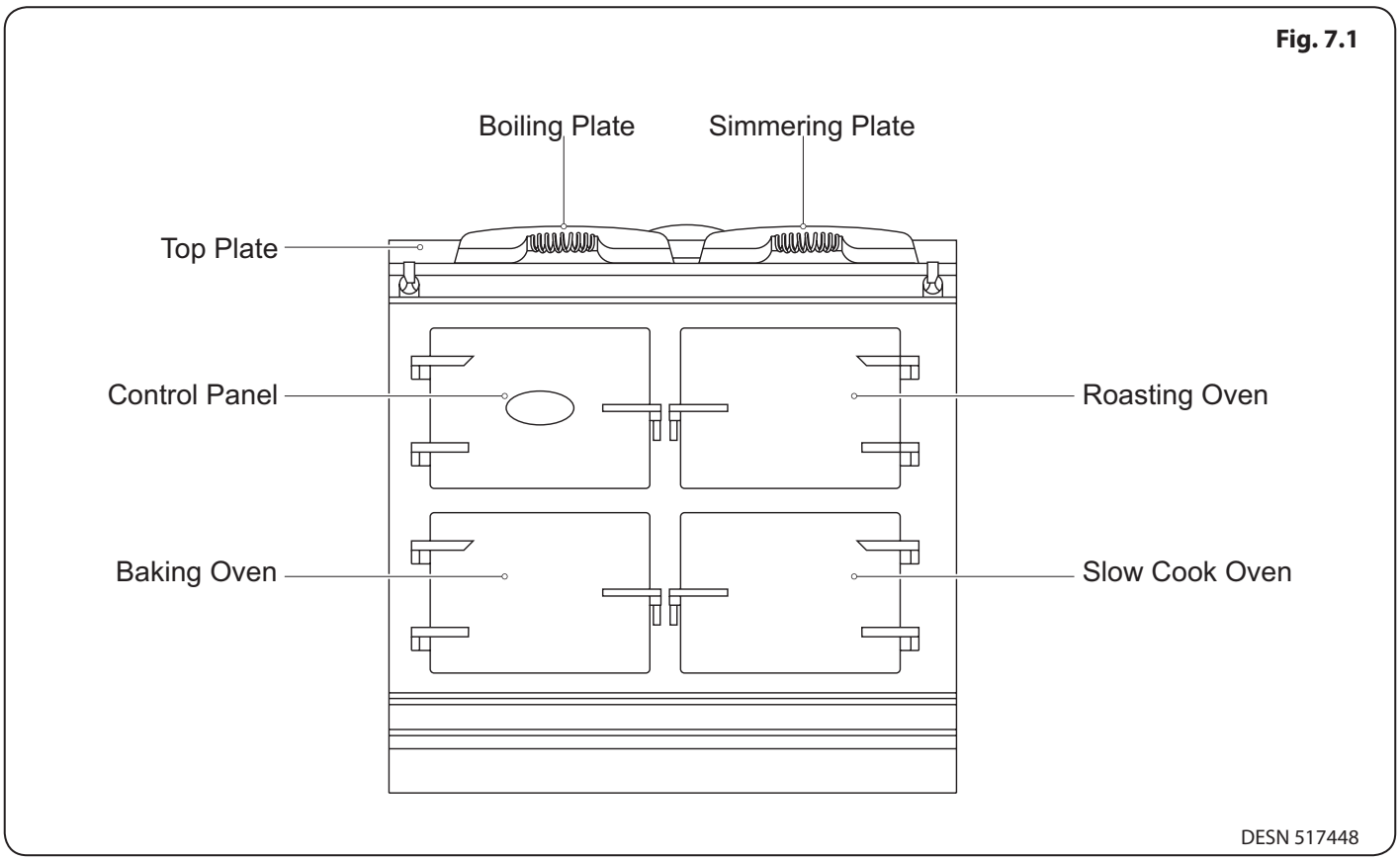

The Roasting Oven

The roasting oven is indirectly heated by two elements, one in the base of the oven and the other in the roof. These elements heat the air and the cast iron within to provide cooking results consistent with the classic AGA heat-storage cooker, with the flexibility of being able to turn it to Slumber or Off when not required.

The roasting oven can be used for 'broiling' at the top and 'shallow frying' on the oven floor.

- When cooking on the bottom of the roasting oven for long periods of time (more than 30 minutes), place the floor grid on the bottom of the oven before putting the food into the oven, this lifts the food away from the base element to ensure best cooking results are achieved.

A note when cooking on the bottom of the roasting oven.

- Please leave 1 hour before cooking directly on the bottom of the oven, this is to ensure maximum temperature stabilisation of the base element.
- You can cook directly on the bottom of the roasting oven for short periods of time e.g. pizza, quiche, or foods that take 30 minutes or less.

NOTE: The roasting oven perforated baffle should be positioned in the top of the roasting oven in order to optimise cooking performance. It must be in place at all times, while the cooker is in operation, including when grilling. Refer to **Fig. 7.2** for fitment of roasting oven perforated baffle.

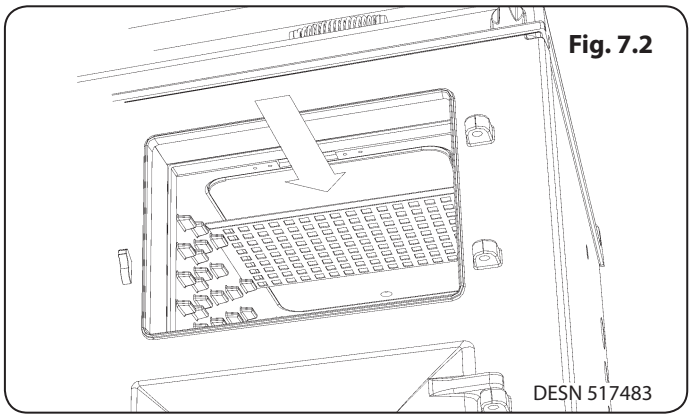

The roasting oven can used for 'grilling' at the top and 'shallow frying' on the oven floor.

The roasting oven is zoned in heat, meaning it is slightly hotter towards the top than the centre and the oven grid shelf set on the oven floor is slightly less hot than the centre.

The beauty of the roasting oven is that any fat splashes are burnt off when the oven is at full heat, just brush out occasionally to get rid of carbon deposits.

The roasting oven is excellent for bread and pastries. Quiches in ceramic or pies in Pyrex dishes need not be baked blind as when they are placed on the floor grid on the base of the oven, the pastry cooks from underneath and the filling will set and brown from the all-round heat. As you are aware metal flan tins conduct heat quicker than ceramic so may need less cooking time.

The specially designed roasting tins and bakeware slide directly onto the runners, so almost every available square centimetre of space can be used. Food can be protected by the use of the cold plain shelf or shielded by means of the large roasting tin, which means that you can cook food that requires different temperatures at the same time. If food is browning too quickly and you do not want to move it to another oven just slide the cold plain shelf over the food to reduce the top heat.

For recipe ideas, see separate recipe book.

The Baking Oven

The baking oven is indirectly heated by two elements, one in the base of the oven and the other in the roof. These elements heat the air and the cast iron within to provide cooking results consistent with classic AGA heat-storage cookers, with the flexibility of being able to turn it to Slumber or Off when not required.

This oven is set at a moderate heat, so is ideal for cakes, biscuits; also anything that requires medium heat cooking such as fish pie, lasagne, soufflés, crumble and roulades. Meat and poultry can be cooked here indeed most things that can be cooked in the roasting oven can be cooked in the baking oven but for a longer time.

For the best results when cooking cakes do allow an hour heat up time. Cook cakes together on one shelf if two shelves are used interchange the food to achieve even coloration, as you would with any oven which is zoned in heat.

As with the roasting oven the specially designed roasting tins and bakeware slide directly onto the runners, so almost every available square centimetre of space can be used. Food can be protected by the use of the cold plain shelf or shielded by means of the large roasting tin, which means that you can cook food that requires different temperatures at the same time.

If food is browning too quickly and you do not want to move it to another oven just slide the cold plain shelf over the food to reduce the top heat.

Baking Oven at Slumber

When the baking oven is set at Slumber it can be used to cook rich fruit cakes or slow cook roasts, casseroles and curries.

With the exception of meringues and rich fruit cakes, food that is to be slow cooked should be brought up to heat before placing in an oven at Slumber. The light will flash orange when heating up to

Slumber, then go solid orange when up to temperature.

For recipe ideas, see separate recipe book.

Slow Cook Oven

The slow cook oven is indirectly heated by one element in the base of the oven.

This element heats the air and the cast iron within to provide cooking results consistent with the traditional slow cook oven of the classic AGA heat-storage cooker, with the flexibility of being able to turn it to Off when not required. The slow cook oven is always at a simmer or Slumber mode ideal for long slow cooking.

The floor grid is used here to protect items placed on the bottom of the oven such as vegetables for steaming, keeping sauces warm or casseroles cooked for a long time. Always ensure this is in place, before putting food into the oven.

The Slow Cook Oven can be described as a continuation oven, it continues to cook food that has been brought up to heat elsewhere on the range with the exception of meringues which are dried out rather than 'cooked'. Therefore the following recipes call for heating the food on the hotplates or in the roasting oven before placing in the slow cook oven.

For recipe ideas, see separate recipe book.

User Guidance

- Allow the oven to heat up fully, the longer the oven is on the better, since this helps reduce the amount of moisture created during slow cooking.
- To get the very best performance, we recommend to use AGA cookware with thick bases and stacking lids.
- Do not place dishes directly on to the oven base. Always place onto either a shelf or the floor grid.
- Cuts of meat and poultry should be brought up to heat ideally in the Roasting oven for 30 - 45 minutes, then transfer to the Slow Cook oven.
- This method is unsuitable for stuffed meat and poultry.
- Make sure that pork and poultry reach an internal temperature of at least 167°F.
- Always bring soups, casseroles and liquids to the boil on the hotplate before putting in the oven.
- Always thaw frozen food completely before cooking.
- Root vegetables will cook better if cut into small pieces.
- Adjust seasonings and thickenings at the end of the cooking time.
- Many dried beans for example, dried red kidney beans must be boiled for a minimum of 10 minutes, after soaking, and before inclusion in any dish.

PLEASE NOTE: **DO NOT** store anything in the Slow Cook Oven and **DO NOT** use any large cookware such as the cold plain shelf until the oven has reached its operating temperature (**Fig. 7.3**). Failure to do this may cause the safety function to lock the appliance in the **OFF** position. It is also advisable when using large cookware in the Slow Cook Oven to push it to the back of the oven.

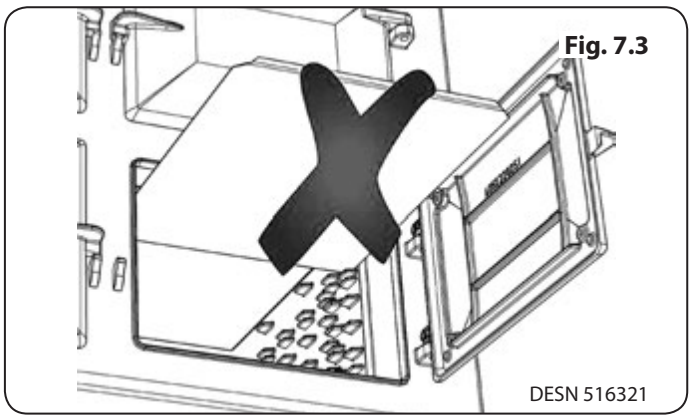

Fig. 7.3

Using the zones of the AGA Total Control

The different zones of the AGA Total Control cooker are described in the following pages individually. Recipe suggestions are given for each area or zone with alternative cooking methods - the choice is yours whichever is most convenient to you. For instance you may prefer to use just the hotplates for a quick dinner in the week or there can be a choice of an oven alternative when you have the ovens on during the colder weather or at weekends, when you are doing more cooking.

The classic AGA heat storage cooker is famous for the gentle warmth it emits, with the AGA Total Control you will get warmth only when the cooker is on or warmth to a lesser degree when only parts of it are on.

The Plates

Top Plate

The top plate is the enamelled surface surrounding the hotplates. It will become warm when the AGA Total Control hotplates are in use. Although it is not a cooking surface you can use the warmth for a number of useful activities, which more often than not save times and washing-up! These include warming honey or syrup in the jar, or melting butter or chocolate in a basin - so saving on melting over a saucepan - but do please put the basin on a cork mat or folded piece of kitchen towel to avoid scratching the enamel. Although it is durable and hard-wearing surface vitreous enamel is glass and will show scratch marks!

The top plate when warm can also be used to rest a cup of coffee or tea or dry off awkwardly shaped tins, peelers or food mixer and processor parts.

Hotplates

The hotplates are operated manually, make sure the standby button is on then just press the touch control panel of the hotplate you need and a flashing green light will appear, when the hotplate reaches its full preset heat it will become solid green.

The boiling plate is on the left hand side and the simmering plate is on the right hand side of the AGA Total Control. The boiling plate is the hottest with the simmering plate being the cooler of the two. They both have electric elements embedded into the cast iron which heat up in approximately 11 and 8 minutes respectively. The hotplates can be used completely independently from the ovens.

This means the AGA Total Control differs from the traditional AGA heat storage range in that they can be used for the entire cooking time of appropriate dishes because the design keeps the hotplates at a constant heat, whereas the traditional AGA range continues to cook on a falling heat so for these we recommend starting on the hotplates then transferring to the ovens, this can be done with the AGA Total Control but is not necessary. For instance, if making a pasta dish with sauce on the AGA Total Control, it can all be done on the hotplates.

The whole hotplate area can be used for cooking and several pans can be accomodated on a single plate at any one time. The hotplates are set very slightly above the top plate to avoid accidental scratching if the pans are pulled to one side. **DO NOT** drag the utensils from one plate to another as the enamel will suffer!

The stainless steel insulated covers are brought down over the hotplates when they are not in use. When the hotplates are 'on' the insulated covers will be warm. We strongly advise not to put anything such as kettles, saucepans or baking tins directly onto the insulated covers because they will show any scratches - invest in a pair of chef's pads to protect the surface if the covers are to be used as resting places!

Keep the hotplates clear of any burnt on food or crumbs by brushing with the wire brush, supplied with your AGA. Cleaning details can be found on **page 24**.

Boiling Plate

The hottest hotplate, the boiling plate is used for boiling, griddling, stir-frying, making toast - indeed anything that requires a high heat. Green vegetables keep their colour when boiled quickly here, or use a steamer over the saucepan to cook more than one vegetable at once.

When stir-frying or cooking anything that is inclined to splash we would recommend using an AGA Splash Shield which will protect the insulated cover from splatter, making cleaning a doddle! Just wash the Splash Shield in hot soapy water or place in a dishwasher between two dinner plates.

Please be advised the boiling plate is too hot to cook food on directly.

For recipes ideas , see separate recipe book.

Simmering Plate

The simmering plate is the cooler of the two hotplates and so is used for recipes that require a lower heat such as making sauces, scrambling eggs, heating milk, slow frying, simmering soups and root vegetables. In addition, it can be used to cook on directly as a form of griddle - invaluable for toasted sandwiches, quesadillas, soups, drop scones, searing scallops and even a non-fat fried egg! Slow cooked toast can be made on the simmering plate, no need here to use the AGA toaster.

The same size as the boiling plate, the simmering plate is also machined flat to give the best all-over contact with the AGA saucepans, grill pan, frying pan and kettle.

Cleaning details can be found on **page 24**.

For recipes ideas, see separate recipe book.

CAUTION:
This unit is heavy, proper equipment and adequate manpower must be used to remove the oven doors.

Fitting the Doors

Fig. 7.1

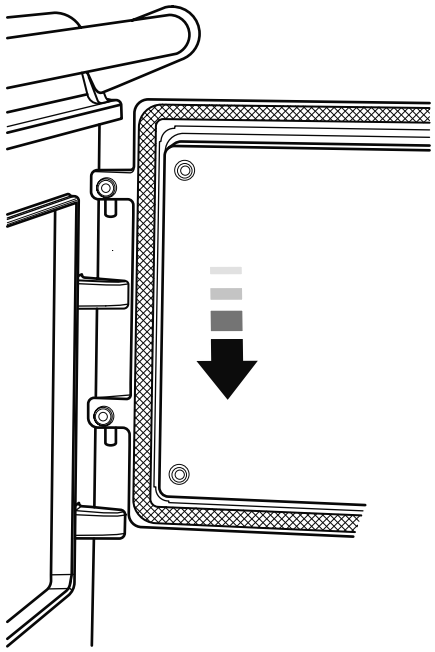

DESN 517491

Fig. 7.2

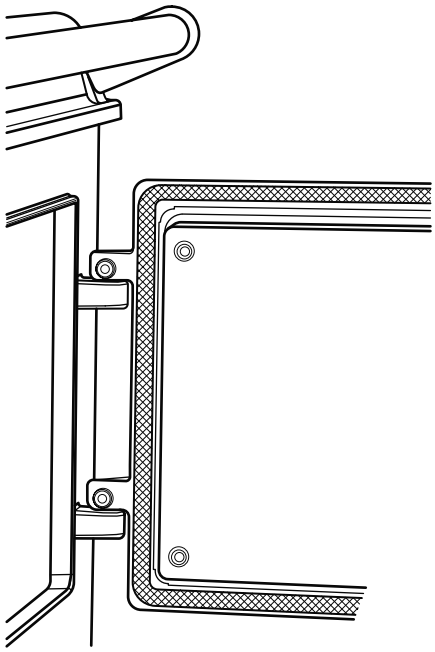

DESN 517489

Removing the Doors

Fig. 7.3

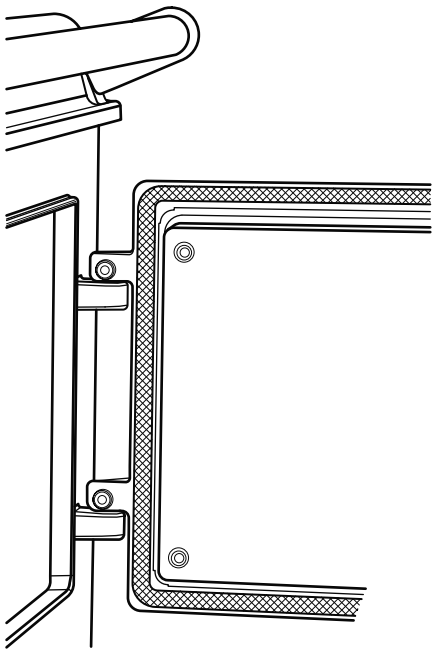

DESN 517489

Fig. 7.4

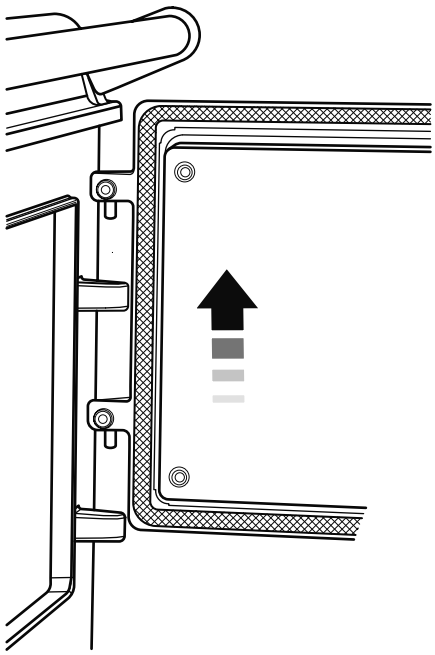

DESN 517490

8. Cleaning & Caring for your Range

WARNING: ACCESSIBLE PARTS MAY BECOME HOT DURING USE. TO AVOID BURNS AND SCALDS CHILDREN SHOULD BE KEPT AWAY.

- **REMEMBER: be careful of the hot appliance.**
- **For most cleaning it is best when the appliance is turned off.**
- **DO NOT use a steam cleaner to clean this range.**
- **DO NOT use abrasive pads, caustic cleaners, oven cleaners or metal scrapers to clean the surfaces of the enamel.**
- **The touch control panel may be cleaned with a damp cloth and warm soapy water.**
- **IMPORTANT: AGA recommend Vitreous Enamel Association approved cleaners for cleaning the vitreous enamelled surfaces of this product obtainable from your AGA Retailer.**
- **When cleaning use as little water as possible.**
- **DO NOT immerse the doors in water as they are packed with insulating material, which will be damaged by excessive moisture.**
- **DO NOT put oven doors or resting plates in a dishwasher.**

Top Plate and Front Plate

- **The easiest way to clean the AGA top plate and front plate is to mop up spills as they happen.**
- **Baked on food is more difficult to clean but can usually be removed with proprietary vitreous enamel cleaners or mild cream cleaners using a cloth, or if necessary, a nylon scouring pad.**
- **If milk or fruit juice, or anything containing acid is spilt on the enamel, wipe off immediately.**
- **Clean off any condensation streaks on the front plate, around the oven doors or any vitreous enamel maybe permanently discoloured.**
- **All that is usually needed to keep the vitreous enamelled surfaces of your range bright and clean is a daily rub over with a damp, soapy cloth followed immediately with a clean, dry cloth to avoid streaks.**
- **Remember the top plate and the polished covers will scratch if pans or utensils are dragged across them.**

To keep the vitreous enamel surfaces of the range bright and clean, a daily rub over with a damp soapy cloth followed immediately with a clean, dry cloth to avoid streaks is all that is required. AGA E-cloths are excellent for this, obtainable from your AGA Retailer.

Cast iron ovens and hotplates

Ovens - are made from cast iron and keep themselves clean. They are very durable, but will rust if surface moisture is left on them. Remember to always switch the ovens on, to dry them out after cleaning.

Heating up the ovens periodically will help burn off any cooking deposits to aid cleaning within the ovens.

To season the ovens, a light vegetable spray oil (corn oil is best) is recommended. Any stubborn stains can be removed with the wire brush supplied.

Hotplates - is made from cast iron, and is easy to care for. Regular maintenance will ensure long-life. They will rust if surface moisture is left on them

Should the hotplates become soiled, use a sponge, cloth, scouring pad or wire brush to remove burnt-on spills.

Rinse off detergents or cleaning agents thoroughly.

Remember to switch on the hotplate for a few minutes to dry it after cleaning. Every now and then, apply a thin coating of vegetable oil (corn oil is best) when the hotplate is cold.

Lids and oven door/lids linings

The top of the insulated cover (lid) - this is chrome or stainless steel and can be kept clean by wiping over with a damp cloth and polished up - the AGA E-cloths are excellent for this purpose as they are lint-free and eco-friendly. AGA stainless steel and chrome cleaner are recommended to keep the insulated cover clean and shining. These can be purchased from your local AGA Specialist.

Lining of the insulated cover (lid interior) - the use of an AGA splash shield is recommended to keep the lining free of fat splashes, obtainable obtainable from your AGA Retailer.

If the lining is marked it is best cleaned when the hotplate is cold. It can be cleaned with hot soapy water and/or a cream cleanser. If badly marked then a soap impregnated pad can be used - this should be used in a circular motion.

The first few times a soap impregnated pad is used you will see the circular marks, these will become reduced and the surface of the lining becomes shinier each time when used. Do not use excessive water and make sure the lining is dry before closing the cover.

Oven door linings - the linings can be cleaned with hot soapy water, a cream cleanser or soap impregnated pad. To deep clean the lining place a towel on the work surface and carefully lift off the oven door (doors are heavy) and place it enamel side down on the towel padding. Clean with a soap impregnated pad to remove stubborn marks. Dry off before replacing on their hinges.

WARNING: ACCESSIBLE PARTS MAY BECOME HOT DURING USE. TO AVOID BURNS AND SCALDS CHILDREN SHOULD BE KEPT AWAY.

Roasting Pans

The enamelled roasting pans supplied with the AGA Total Control should be cleaned in hot soapy water, soaking if necessary. A nylon scouring pad can also be used. They may also be cleaned in the dishwasher, but with constant use, the enamelled finish will become dull in appearance.

DO NOT use caustic cleaners or oven cleaners.

PLEASE NOTE: Cleaners used for Vitreous Enamel are often unsuitable for use on: chrome and stainless steel components, including the insulating covers, hand-rails and their brackets.

9. Troubleshooting

ERROR CODES

In the unlikely event an error occurs with your AGA Total Control cooker, error codes may be displayed on your handset, for example:

⚠ **133**

Please provide AGA Service with this information. It will assist the service engineer with diagnosing your fault.

10. Installation Instructions

CAUTION: THIS UNIT IS HEAVY, PROPER EQUIPMENT AND ADEQUATE MANPOWER MUST BE USED IN MOVING THE RANGE TO AVOID DAMAGE TO THE UNIT OR THE FLOOR.

REMEMBER, when replacing a part on this appliance, use only spare parts that you can be assured conform to the safety and performance specification that we require.
DO NOT use reconditioned or copy parts that have not been clearly authorised by AGA.

**PLEASE READ THESE INSTRUCTIONS BEFORE USING THIS APPLIANCE
AND KEEP IN A SAFE PLACE FOR FUTURE REFERENCE.**

11. Installation Introduction

Health and Safety

Consumer Protection

As responsible manufacturers we take care to make sure that our products are designed and constructed to meet the required safety standards when properly installed and used.

⚠ **IMPORTANT: Please read the accompanying warranty.**

Any alteration that is not approved by AGA could invalidate the approval of the appliance, operation of the warranty and could also affect your statutory rights.

In the interests of safety and effective use, please read the following before using your new AGA appliance.

Installation Requirements

THIS APPLIANCE MUST ONLY BE INSTALLED BY PERSONS THAT ARE CERTIFIED TO LOCAL REGULATIONS.

NOTE: This installation instruction should be left with the appliance and the owner to retain for future use.

Before installation of an AGA can be made, the site is inspected for suitability by an authorized AGA distributor and corrected where necessary to conform with local or regional electrical codes.

USA

Model Number AGA TC3

FCC ID: A2M-AGA-TC3

FCC ID: A2M-AGA-TC3TEK

This device complies with part 15 of the FCC Rules. Operation is subject to the following two conditions: (1) This device may not cause harmful interference, and (2) this device must accept any interference received, including interference that may cause undesired operation.

CANADA

Model Number AGA TC3

IC: 10181A-AGATC3TEK

Model Number AE4M280526

IC: 10181A-AGATC3

This device complies with Industry Canada licence-exempt RSS standard(s). Operation is subject to the following two conditions: (1) this device may not cause interference, and (2) this device must accept any interference, including interference that may cause undesired operation of the device.

In your own interest and that of safety to comply with the law, all appliances should be installed by an authorized AGA distributor in accordance with the relevant regulations.

Delivery Requirements

- The AGA TC3 arrives on 1 pallet

There must be access to the kitchen to manipulate a foot print of 39 9⁄16″ (1005mm) x 29 1⁄8″ (740mm). A wooden template (skate with castor wheels) of dimensions 39 9⁄16″ (1005mm) x 29 1⁄8″ 740mm could be used to check if the AGA Total Control fully built appliance is able to fit through the property grounds and doors into its installation position in the kitchen. It must also be considered that the height of the appliance is 37 5⁄8″ (960mm) off pallet and 43 3⁄8″ (1100mm) on the pallet, so high level obstacles/restrictions must not be overlooked.

If this skate/template can be manipulated through the property grounds and doors into position, then the AGA can be installed as intended with no re-work.

12. Location

Refer to **Fig. 12.1 to Fig. 12.3**.

It is recommended that any soft material flooring is removed from where the AGA will be installed.

It is essential that the base or hearth on which both range and/or module stands should be level and capable of supporting the total weight of one or both units.

The front plinth cover is removable and must not be obstructed by flooring or tiles. If necessary the range must be raised by the thickness of the tiles to ensure the plinth can be removed.

Any adjacent walls that project above the height of the hob must be of heat resistant material.

The side wall above the hob shall be greater than 3" (75 mm) from the range.

Surfaces over the top of the range must not be closer than 30" (760 mm).

The vent slots in the back of the top plate (or shroud) must not be obstructed.

NOTE: It is advisable that the supply cable is routed away from any hot surfaces i.e. hot water/flue pipes.

In the interest of safety, due consideration must be given to the protection of the electric cable to the range.

If a supply cord is damaged it must be replaced by the manufacturer, its service agent or similarly qualified persons in order to avoid a hazard.

The appliance is designed for the voltage stated on the rating plate, which is situated in the centre vent slot near the base of the front plate.

DO NOT install the range behind a decorative door in order to avoid overheating.

The complete range is floor-mounted and the space in which the appliance is to be fitted must have the following minimum dimensions:-

A minimum clearance of 2 ¼" (60 mm) is required above the raised insulating cover handle.

Overhead Cabinets

To eliminate the risk of burns or fires by reaching over hot surface units, cabinet storage space located above the surface units should be avoided.

Minimum Clearance to Combustibles

A gap of at least ½" must be observed between the rear of the top plate, and the wall behind the appliance. If the rear wall is of combustible material there must be a gap of 1" (25mm).

Range Hoods

It is recommended that this AGA is fitted with a range hood. The AGA venting system is located on top of the AGA between the two hotplates, and is designed for venting the moisture from the ovens. The cooker hood should be positioned not less than the minimum height as recommended by the manufacturer, from the top of the AGA.

Side Clearances

A ⅛" 3 mm gap is required each side between the range top plate and adjoining work surfaces that may be fitted, this is to allow for the safe removal of the top plate should this be required at a later date.

Where ranges are fitted against side walls a 4 9⁄16" (116 mm) clearance is required on the right and left hand side for oven doors access.

If the AGA is to be installed in a brick recess, then the minimum clearance should be increased by at least ⅜" (10 mm), to allow for the walls not being square.

In addition, a minimum clearance of 39 ⅜" (1000 mm) must be available at the front of the range to enable the range to be serviced.

Tiling

When the range is to stand in a recess or against a wall which is to be tiled, in no circumstances should the tiles overlap the range top plate, access to remove the top plate must be allowed for servicing at a later date.

Rear Wall

A gap of at least ⅜" (10 mm) must be observed from the rear of the top plate, and the wall behind the appliance.

This appliance runs continuously, please take note of these **IMPORTANT** instructions:

Combustible Walls

Houses constructed of combustible materials (such as all-timber or stud wall partitions and batoned plasterboarded walls) require special wall heat protection features.

Non-combustible walls behind a range must be of at least 1" 25 mm thick insulation board (Monolux or equivalent), up to hotplate level.

NOTE: Ensure electric cabling or plastic services do not pass within or on the outside of the wall, behind or directly above the range.

This type of material can age prematurely when exposed to continuous higher ambient temperature.

Specifications

Fig. 12.1

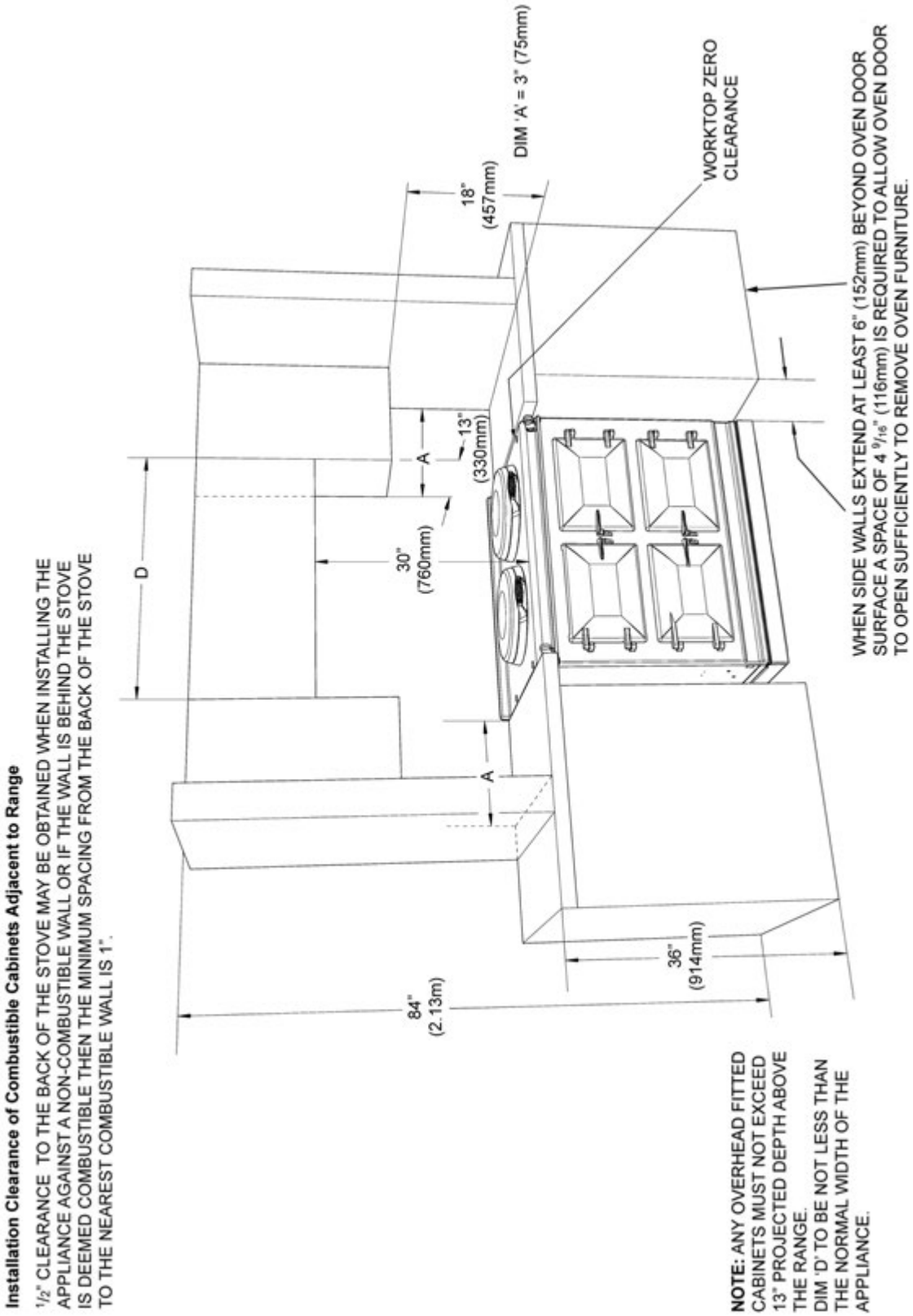

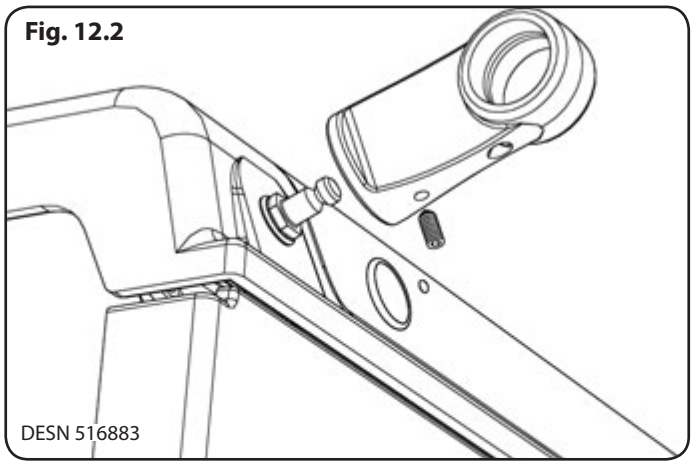

Fig. 12.2

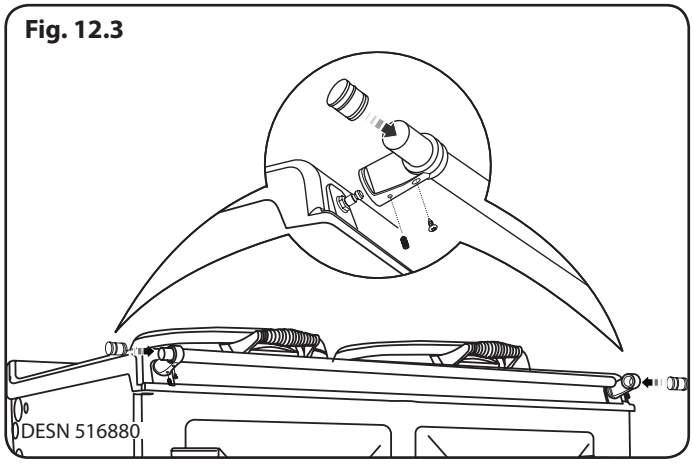

Fig. 12.3

Fitting the Handrail

1. Fit the handrail bracket over the fixing stud located on the top plate. Lock into position by tightening the grub screw nearest the appliance **Fig. 12.2**.
2. Slide the handrail through the handrail brackets **Fig. 12.3**.
3. Once the handrail assembly is located squarely, lock the handrail in position by winding in the grub screws on the underside of each handrail bracket.
4. Once the handrails are locked in position, fit the handrail endcaps. The endcaps should be carefully pushed into place until they sit flush with the outside face of each bracket (a light smear of lubricant such as, hand or dish soap on the end cap 'O' rings may ease fitment **Fig. 12.3**.
5. Finally, fit the plinth facia to the magnets on the front of the plinth. Make sure that the plinth facia is centrally located and does not overhang the range.
6. Commission the AGA Total Control, as stated in the relevant Installation Instructions and carry out functional test on each of the features of the AGA Total Control.
7. Attach warning hanger (EGLL516660) located in literature pack, to AGA Total Control handrail when installation is complete. Advise customer to remove and read warning label.
8. Hand this Guide to the user for retention and instruct in the safe operation of the appliance.
9. Also advise the user that, for continued efficient and safe operation of the appliance, servicing is carried out at intervals recommended by the AGA distributor.

13. Connection to the Power Supply

Electric Shock Hazard

The rating plate is located behind the removable plinth, see **Fig. 13.2**.

If the supply cord is damaged, it must be replaced by the manufacturer, its service agent or similarly qualified person to avoid a hazard.

Electrical Grounding is required on this appliance.

DO NOT connect to the electrical supply until the appliance is permanently grounded.

This appliance must be connected to a grounded, metallic, permanent supply. Or a grounding connector should be connected to the grounding terminal or wire lead on the appliance.

Failure to follow these instructions could result in death or serious injury.

This range must be supplied with a 240V, 60Hz power supply and connected to an individual, properly grounded branch circuit protected by a circuit breaker. At 240V, it has a maximum load of 30 amps. Electric hook-up must be done by a licensed electrician. This unit must be installed according to regional codes, or in the absence of codes, the National Electrical Code.

- Product installation requires a separate (not shared) 240V/40 amp circuit protected by an appropriate branch circuit supply.
- The service cord on your range is fitted with a standard four (4) prong type 14-50P plug (matching receptacle 14-50R).

The method of connection to the mains electricity supply must facilitate complete electrical isolation of the appliance.

The mains connection and isolation should not be positioned above the range and must be positioned within the area defined in **Fig. 13.2**.

THIS RANGE MUST BE COMPLETELY ISOLATED FROM THE ELECTRICITY SUPPLY BEFORE SERVICING. THE RANGE IS DESIGNED FOR THE VOLTAGE STATED ON THE RATING PLATE, WHICH IS SITUATED BEHIND THE PLINTH COVER.

Mains Supply Location

Fig. 13.1

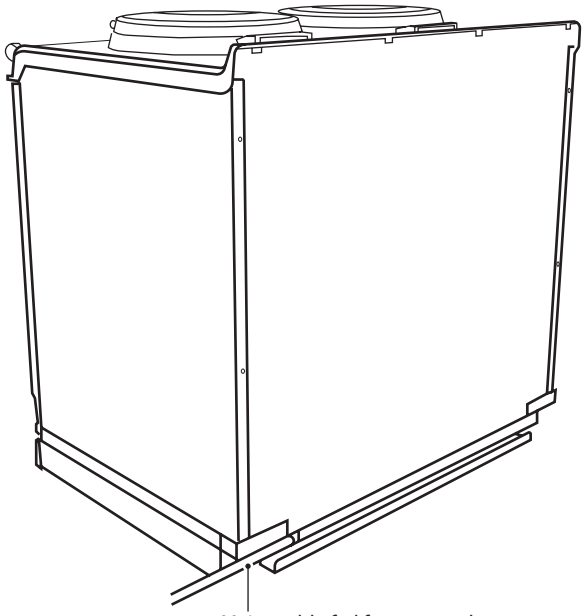

Mains cable fed from control tray right-hand exit through ducting dependent upon position of supply socket

DESN 517444

Fig. 13.2

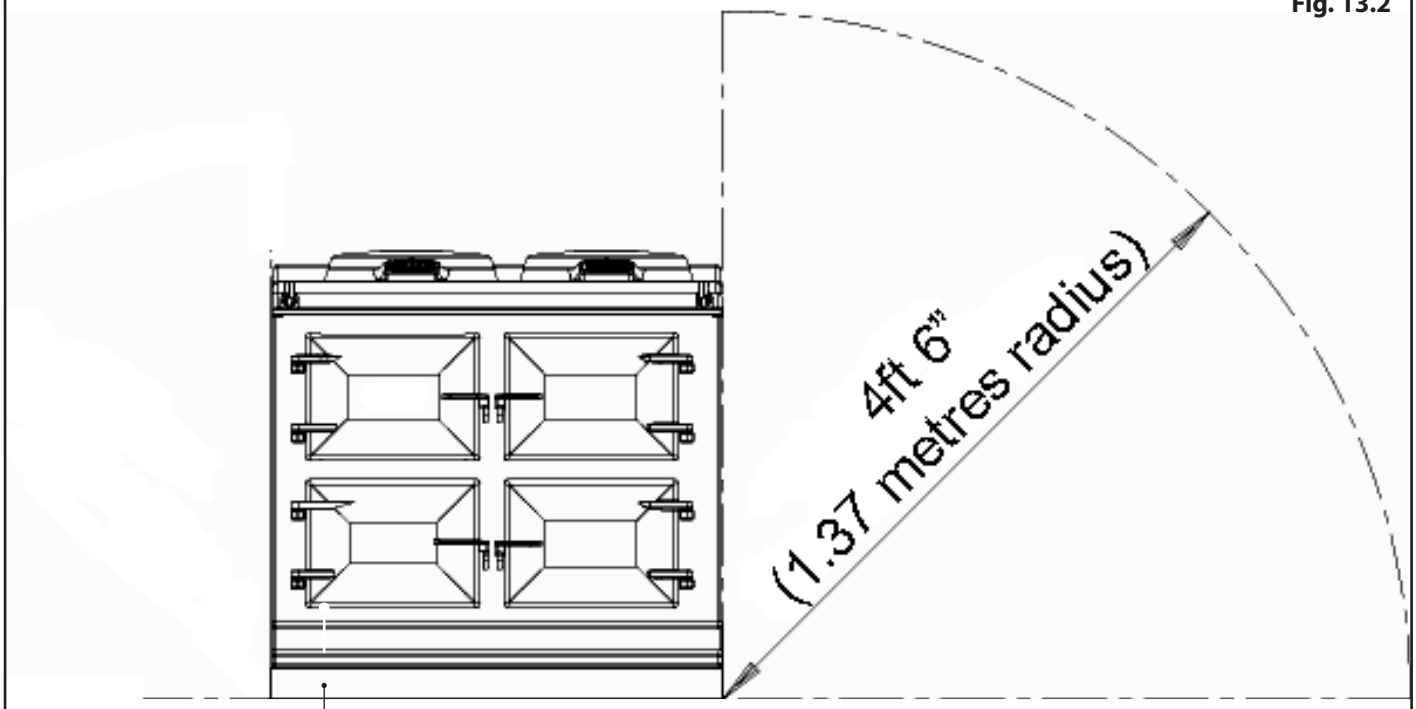

Data plate located behind toe-kick, pull toe-kick to remove.

The mains supply connection and isolation point must be within the zone shown

DESN 516295

14. Circuit Diagram AGA TC3

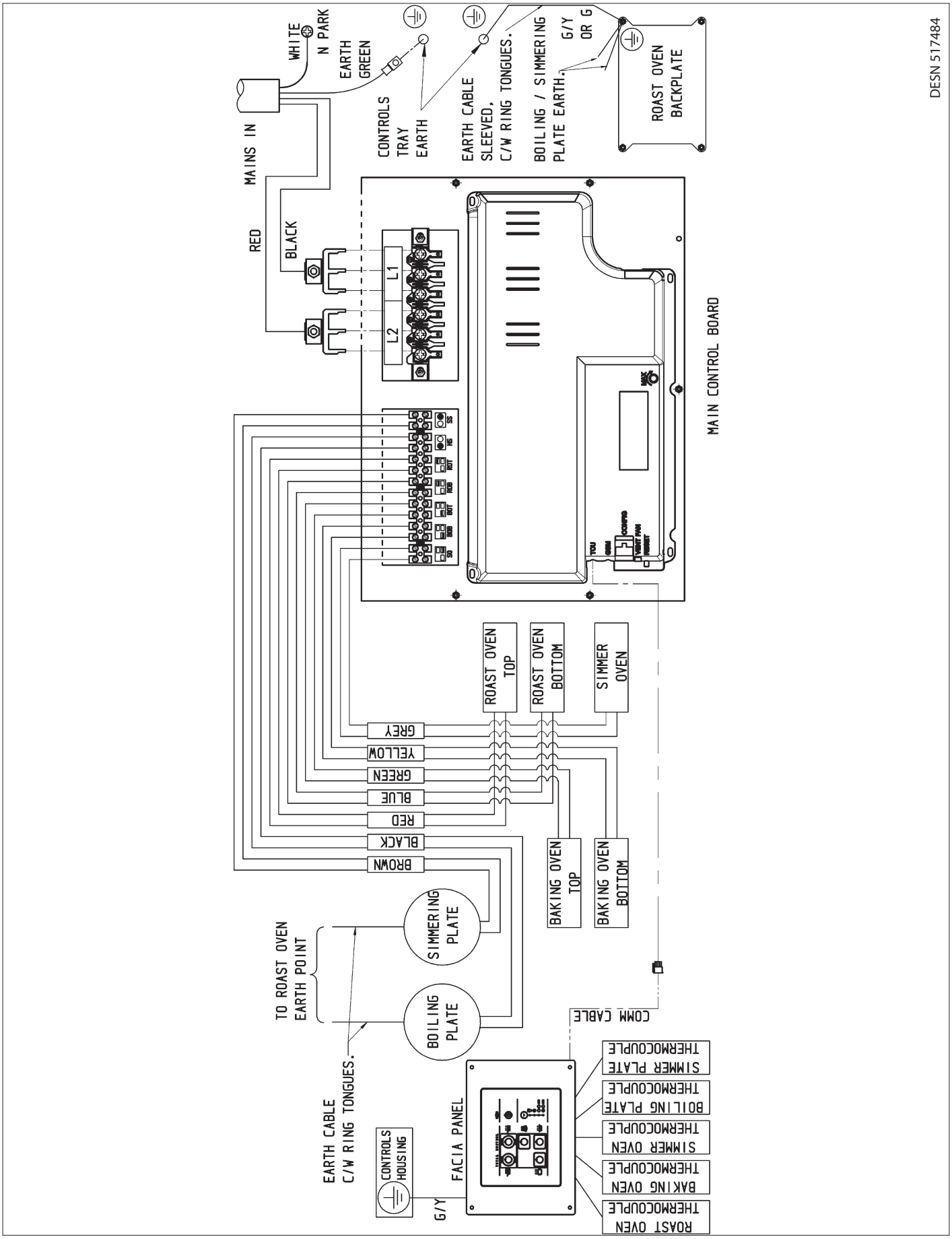

15. Warranty

Welcome

Thank you for choosing an AGA cooker. We are sure that you will be impressed with the performance of your new AGA appliance and with the ongoing service you will receive.

Peace of Mind

Every new AGA leaving the factory and installed by an AGA approved outlet carries a 5 year guarantee on parts (certain consumable parts are excluded - for full details see below). This also includes all labor charges for the first 12 months.

Distribution and Service Network

AGA has set up an International Distributor and service network with fully trained service engineers available to support your AGA within the guarantee period. The approved outlet installing your AGA is responsible for providing this warranty.

No charge will be made for replacement parts providing:

- An appliance fault is found.
- The relevant part of the AGA is still covered by the guarantee.
- Regular servicing has been carried out in accordance with the manufacturer's instructions by authorized AGA engineers, using approved spare parts. The service booklet will need to be completed accordingly.

There will be no labor charges during the first 12 months of the warranty.

A call out charge may be applicable if:

- The authorized AGA service engineer who calls at your home finds no fault with the AGA.
- Other parts of your plumbing system or flue, are either faulty or do not comply with the appropriate installation instructions.
- The unit is more than 12 months old.
- If it is deemed the product has been misused.

Please note that invoices for call out repair work carried out during the guarantee period by any third party cannot be accepted.

In the event of an appliance fault during the guarantee period, please contact your service provider. They will arrange for an engineer to call as soon as possible.

What is not included in the guarantee

- Consumable parts
- Flues (except integral power and balanced flues).
- Any labor charges not directly connected with the repair or replacement of a faulty component.
- Any consequential loss.
- Any part of the domestic hot water system which is not an integral part of the AGA.
- Accidental or cosmetic damage.
- Routine preventative service and maintenance.
- Any external controls/components not supplied by AGA.
- Oil filled Heat indicators are only covered for 12 months.

Regular Servicing

Regular maintenance is an essential part of keeping your AGA range running safely and efficiently.

Since your AGA can operate continuously it is important to ensure regular servicing is undertaken by AGA Service or your Authorized AGA Distributor. Only genuine AGA spare parts are used.

Please note that routine servicing in accordance with the manufacturer's instructions is also a condition of the warranty agreement.

To ensure your AGA receives this essential maintenance, please contact AGA Service or your Distributor, who will be pleased to help.

Service Intervals

(Certain models may vary)

Oil AGA - every 6 months

Gas and Electric Heat Storage AGA's - every 12 months

Electric 13 amp and AGA Total Control :

- Interim service 2 1/2 years (30 months)
- Full service 5 years (60 months)

Consumable Parts Not Covered by this Warranty

- Oil AGA - oil filters and wicks.
- Gas Fired AGA's - ignitor electrodes, thermocouples.
- Electric AGA - Vent and circulation fans are for 2 1/2 years (30 months)

Exclusions

This warranty does not cover products which have been altered by the customer or by a third party. Materials, spare parts and specific tools must be as recommended by AGA.

Warranty does not cover misuse, abuse or impact damage. Corrosion caused by incorrect use of chemical cleaners or scratches to chrome or stainless steel components by abrasive cleaning materials are also excluded.

Warranty strictly excludes commercial use. Appliances are covered for domestic use only.

Flues, Ventilation and External Services:

External services, gas supply, external oil lines, tanks and filters are not covered under this warranty.

This warranty does not cover incorrectly or poorly maintained flue systems or appliances installed on incorrect flue

systems of unsuitable material and outside the specification detailed in the product instructions.

Appliances not provided with adequate ventilation as detailed in the product instructions also fall outside this warranty.

This policy applies to products which carry the AGA name plate and trademark (AGA utensils and accessories are covered by a separate policy).

Product fuel conversions are not covered.

THIS WARRANTY POLICY DOES NOT AFFECT THE OWNERS STATUTORY RIGHTS

16. Service

- In the event of your range requiring maintenance, please contact AGA Marvel or your AGA Retailer.
- Your range must only be serviced by a qualified engineer, from an authorized AGA Specialist.
- Do not alter or modify the range.
- Only the parts specified by the manufacturer, are to be fitted.
- The appliance warranty does not cover Commercial use.

For continued efficient and safe operation of this appliance, it is important that servicing is carried out at regular intervals as recommended by your AGA Retailer. The range should be turned OFF in advance of the service so that the appliance will have cooled down sufficiently.

A HOT APPLIANCE CANNOT BE SERVICED.

For further advice or information contact your local AGA Specialist

With AGA Marvel's policy of continuous product improvement, the Company reserves the right to change specifications and make modifications to the appliance described and illustrated at any time.

Supplied by

AGA Marvel

1260 E. Van Deinse St.

Greenville, MI 48838

Business (616) 754-5601

Fax (616) 754-9690

Toll Free Telephone 800-223-3900

www.agamarvel.com